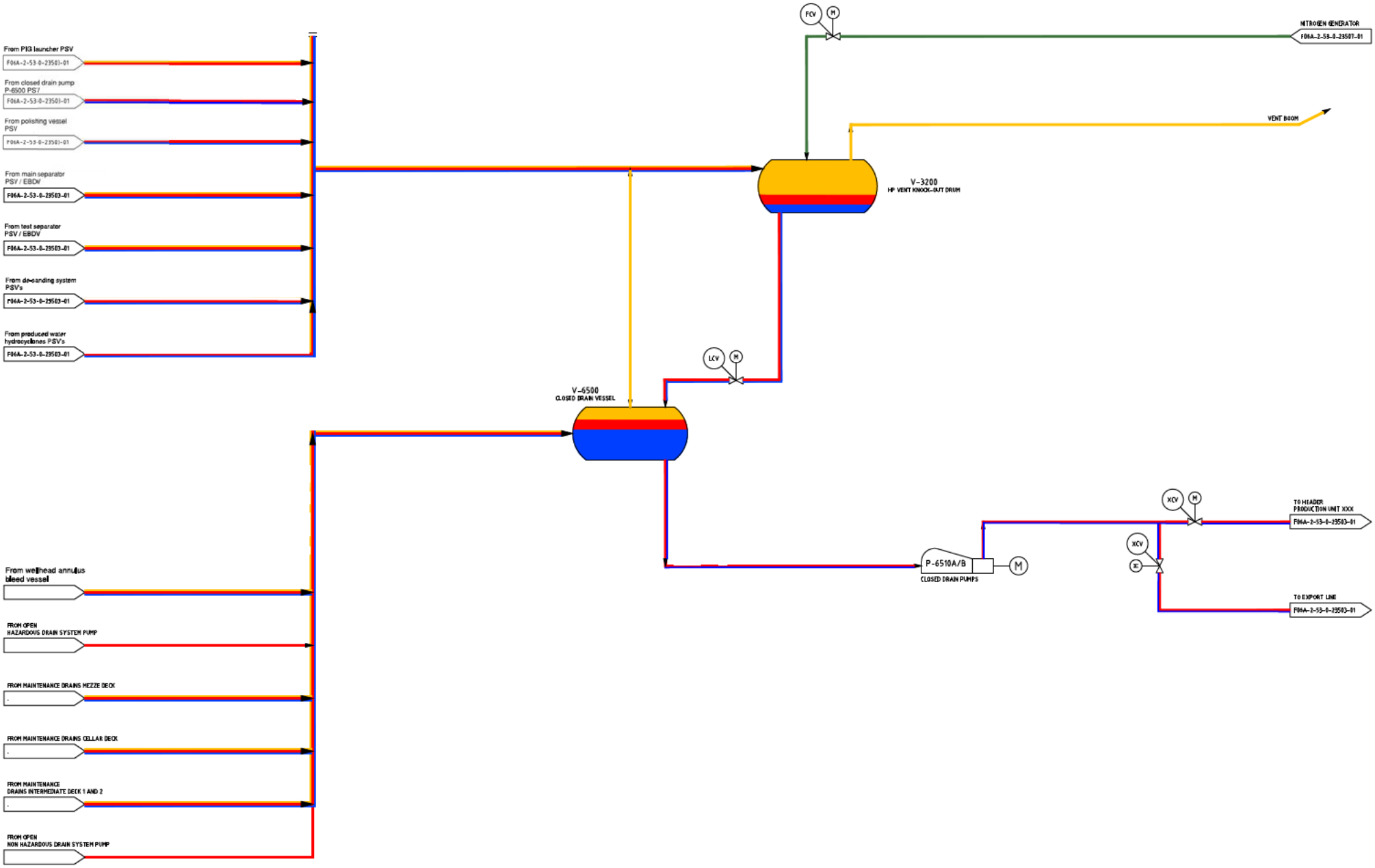

GENERAL NOTES:

A. FOR SYMBOLS AND LEGENDS REFER TO: F06A-2-52-0-22500-01-REV XX, F06A-2-52-0-22500-02-REV XX.
B. FOR SAFEGUARDING FLOW-SCHEME REFER TO: F06A-2-53-0-24002-03- REV XX.
C. FOR HEAT AND MASS BALANCE RELEVANT TO THIS DRAWING, REFER: F06A-2-53-0-24001-01.

HOLDS:

LEGENDA

GAS
OIL
WATER
NITROGEN

REV	DATE			REVISION DESCRIPTION	DRAWN BY	CHECKED BY	APPROVED BY
C							
B							
A							
01	22	03	2024	FOR COMMENTS			

ISSUE REV — REVISION DATE

ENGINEERED BY: KH ENGINEERING B.V. — SCALE: -/- — PAPER SIZE: A1

This document is confidential. The copyright is vested in ONE-Dyas B.V. Neither the whole nor any part of this document may be disclosed to any third party or reproduced, stored in any retrieval system or transmitted in any form or by any means (electronic, mechanical, reprographic, recording, or otherwise) without the prior written consent of the copyright owner. 2019.

ONE-Dyas B.V.
Amsterdam

PFD
VENT AND DRAIN SYSTEM
FEED DESIGN OF F06-A JACKET AND TOPSIDES FACILITIES

SYSTEM	MELCHE	DISCIPLINE	PHASE	DOCUMENT NUMBER	SHEET NR	REVISION
F06A	2	53	0	23504	01	01