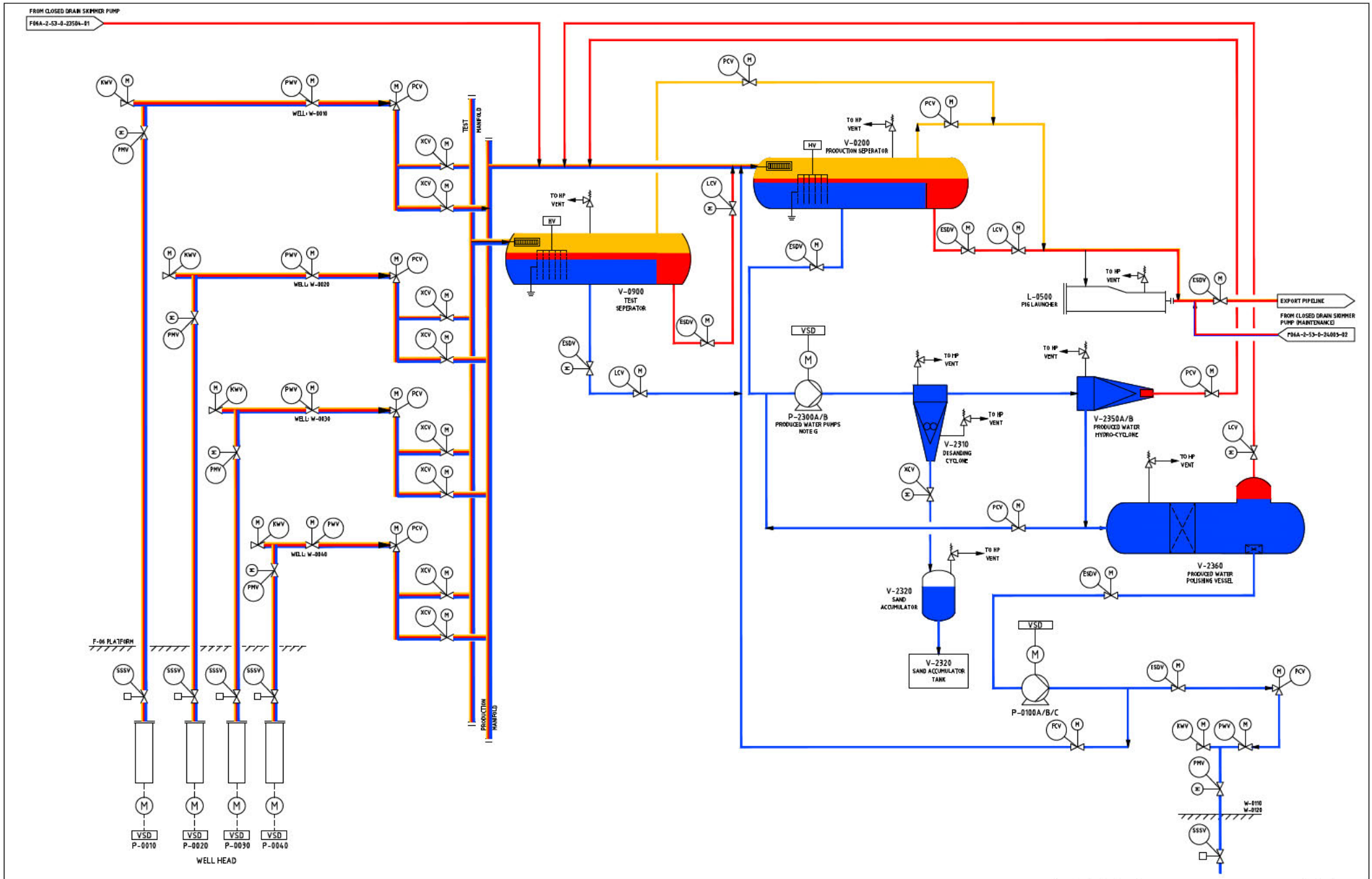

GENERAL NOTES:

HOLDS:

LEGENDA

GAS
OIL
WATER

C								
B								
A								
01	22	03	2024	FOR COMMENTS				
ISSUE BY	REVISION DESCRIPTION							

PFD
MAIN PROCESS PRODUCT SEPARATION AND TREATMENT
FEED DESIGN OF F06-A JACKET AND TOPSIDES FACILITIES

ONE-Dyas B.V.
Amsterdam

ASSETCODE	DISCIPLINE	SUBSYSTEM CODE	PHASE	DOCUMENT NUMBER	SHEET NR	REVISION
F06A	2	53	0	23503	01	01